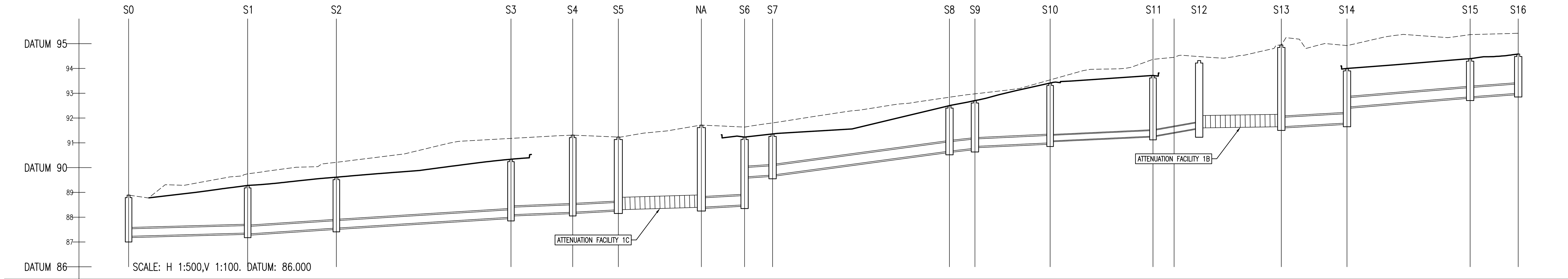

	COVER LEVEL	INVERT LEVEL	DEPTH (m)	DISTANCE (m)	PIPE SLOPE	PIPE SIZE
S0	88.890	87.230	1.740			
		1.017		23.98	1:180	300mm
S1	89.282	87.363 / 87.324	1.958			
		1.016		17.87	1:75	300mm
S2	89.613	87.561 / 87.560	2.053			
		1.015		35.16	1:80	300mm
S3	90.339	88.000 / 88.100	2.339			
		1.014		12.44	1:124	300mm
S4	91.309	88.200 / 88.200	3.109			
		1.013		9.19	1:92	300mm
S5	91.233	88.300 / 88.300	2.933			
		1.012		16.73	1:167	1000mm
NA	91.713	88.400 / 88.400	3.313			
		1.011		8.70	1:87	375mm
S6	91.233	88.500 / 89.625	2.733			
		1.010		5.63	1:75	375mm
S7	91.359	89.700 / 89.700	1.659			
		1.009		35.63	1:37	375mm
S8	92.501	90.666 / 90.666	1.835			
		1.008		5.13	1:45	375mm
S9	92.705	90.780 / 90.855	1.925			
		4.002		15.14	1:104	300mm
S10	93.411	91.000 / 91.075	2.411			
		4.001		20.71	1:106	225mm
S11	93.717	91.270 / 91.270	2.447			
		5.006		13.67	1:41	225mm
S12	94.319	91.600 / 91.600	2.944			
		7.009		18.37	1:367	1000mm
S13	94.947	91.650 / 91.650	3.297			
		7.008		13.23	1:88	375mm
S14	94.002	91.800 / 92.442	2.202			
		7.007		24.79	1:60	375mm
S15	94.394	92.855 / 92.855	1.539			
		7.006		9.69	1:67	375mm
S16	94.582	93.000	1.582			

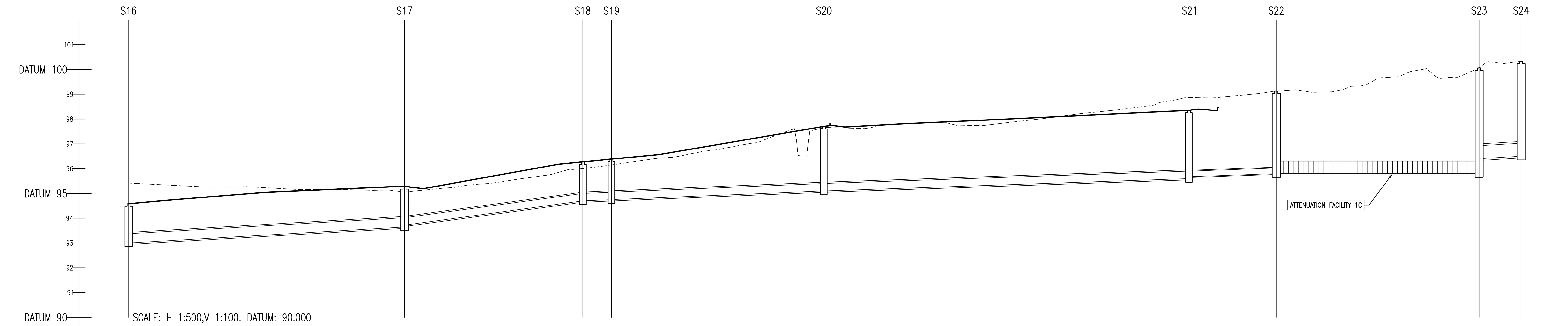

	COVER LEVEL	INVERT LEVEL	DEPTH (m)	DISTANCE (m)	PIPE SLOPE	PIPE SIZE
S16	94.582	93.000	1.582			
		7.005		55.57	1:86	375mm
S17	95.272	93.645 / 93.720	1.627			
		7.004		35.91	1:37	300mm
S18	96.275	94.700 / 94.700	1.575			
		7.003		5.76	1:115	300mm
S19	96.386	94.750 / 94.750	1.636			
		7.002		42.79	1:122	300mm
S20	97.704	95.100 / 95.100	2.604			
		9.015		73.52	1:147	300mm
S21	98.352	95.600 / 95.675	2.752			
		9.014		17.58	1:141	225mm
S22	99.125	95.800 / 95.800	3.325			
		9.013		40.85	Horizontal	1000mm
S23	100.065	95.800 / 96.400	4.265			
		9.012		8.47	1:84	525mm
S24	100.332	96.501	3.831			

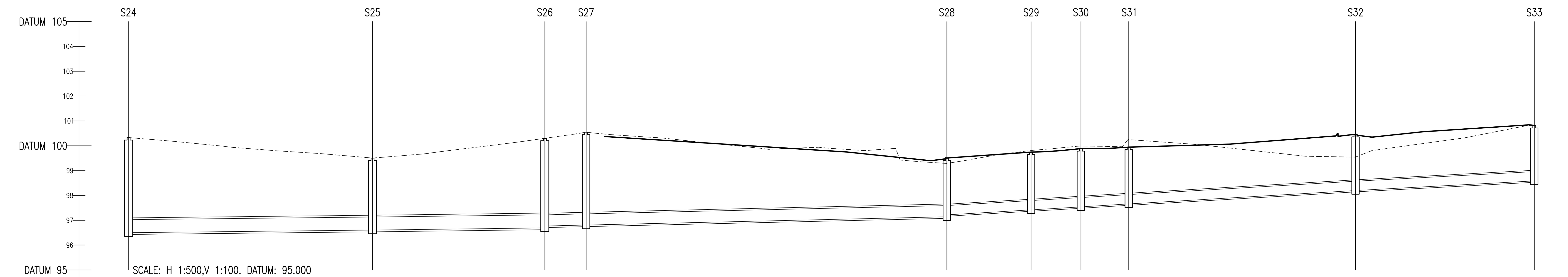

	COVER LEVEL	INVERT LEVEL	DEPTH (m)	DISTANCE (m)	PIPE SLOPE	PIPE SIZE
S24	100.332	96.501	3.831			
		9.011		49.12	1:459	525mm
S25	99.505	96.608 / 96.608	2.897			
		9.010		34.70	1:399	525mm
S26	100.303	96.695 / 96.770	3.608			
		9.009		8.32	1:208	450mm
S27	100.549	96.810 / 96.810	3.739			
		9.008		72.63	1:218	450mm
S28	99.508	97.143 / 97.218	2.365			
		9.007		16.99	1:84	375mm
S29	99.746	97.420 / 97.420	2.326			
		9.006		10.01	1:83	375mm
S30	99.888	97.540 / 97.540	2.348			
		9.005		9.64	1:80	375mm
S31	99.945	97.660 / 97.660	2.285			
		9.004		45.68	1:85	375mm
S32	100.458	98.200 / 98.200	2.258			
		9.003		36.02	1:94	375mm
S33	100.819	98.585	2.234			

© COPYRIGHT OF THIS DRAWING IS RESERVED BY DBFL CONSULTING ENGINEERS. NO PART SHALL BE REPRODUCED OR TRANSMITTED WITHOUT THEIR WRITTEN PERMISSION.

ON ORIGINAL
0 5 10 15 20 25 30 40 50mm

NOTES:

1. ALL DRAWINGS TO BE CHECKED BY CONTRACTOR ON SITE AND ENGINEER INFORMED OF DISCREPANCIES BEFORE WORK COMMENCES
2. ALL LEVELS ARE IN METRES AND ARE RELATED TO ORDNANCE DATUM
3. CONTRACTOR SHALL SATISFY HIMSELF AS TO THE ACCURACY OF PAVEMENT LEVELS ON SITE PRIOR TO COMMENCEMENT OF WORKS ON SITE
4. ALL WORKS TO BE CONSTRUCTED IN ACCORDANCE WITH THE NRA SPECIFICATION FOR ROAD WORKS UNLESS NOTED OTHERWISE
5. THIS DRAWING IS FOR PLANNING PURPOSES ONLY
6. MANHOLE COVER LEVELS ARE TO CONFORM WITH FINISHED ROAD AND PATH LEVELS
7. WHERE COVER TO PIPE IS LESS THAN 1200mm (ROAD/PATH/VERGE) OR 900mm (OPEN SPACE) SURROUND PIPE IN MINIMUM 150mm CONCRETE

KEY

- - - - - EXISTING GROUND PROFILE
——— PROPOSED GROUND PROFILE

REV.	DATE	DESCRIPTION	BY	CHKD.

PLANNING

DESIGNED	NCG	PREPARED	PJC
DATE	SEP 2019	CHECKED	DJR

DUBLIN OFFICE Ormond House, Upper Ormond Quay, Dublin 7, Ireland.
PHONE +353 1 400 4000
FAX +353 1 400 4050

WATERFORD OFFICE Unit 2, The Chandlery, 1-2 O' Connell Street, Waterford, Ireland.
PHONE +353 51 309 500
FAX +353 51 844 913

DBFL Consulting Engineers
EMAIL info@dbfl.ie SITE www.dbfl.ie

PROJECT
LANDS AT NEWCASTLE, SOUTH DUBLIN

DRG. TITLE
LONGITUDINAL SECTIONS THROUGH SURFACE WATER SHEET 1

ARCHITECT
MOLA

SCALE H 1:500, V 1:100 @A1 | FILE REF. 170024-3025

DRG. NO. 170024-3031 .